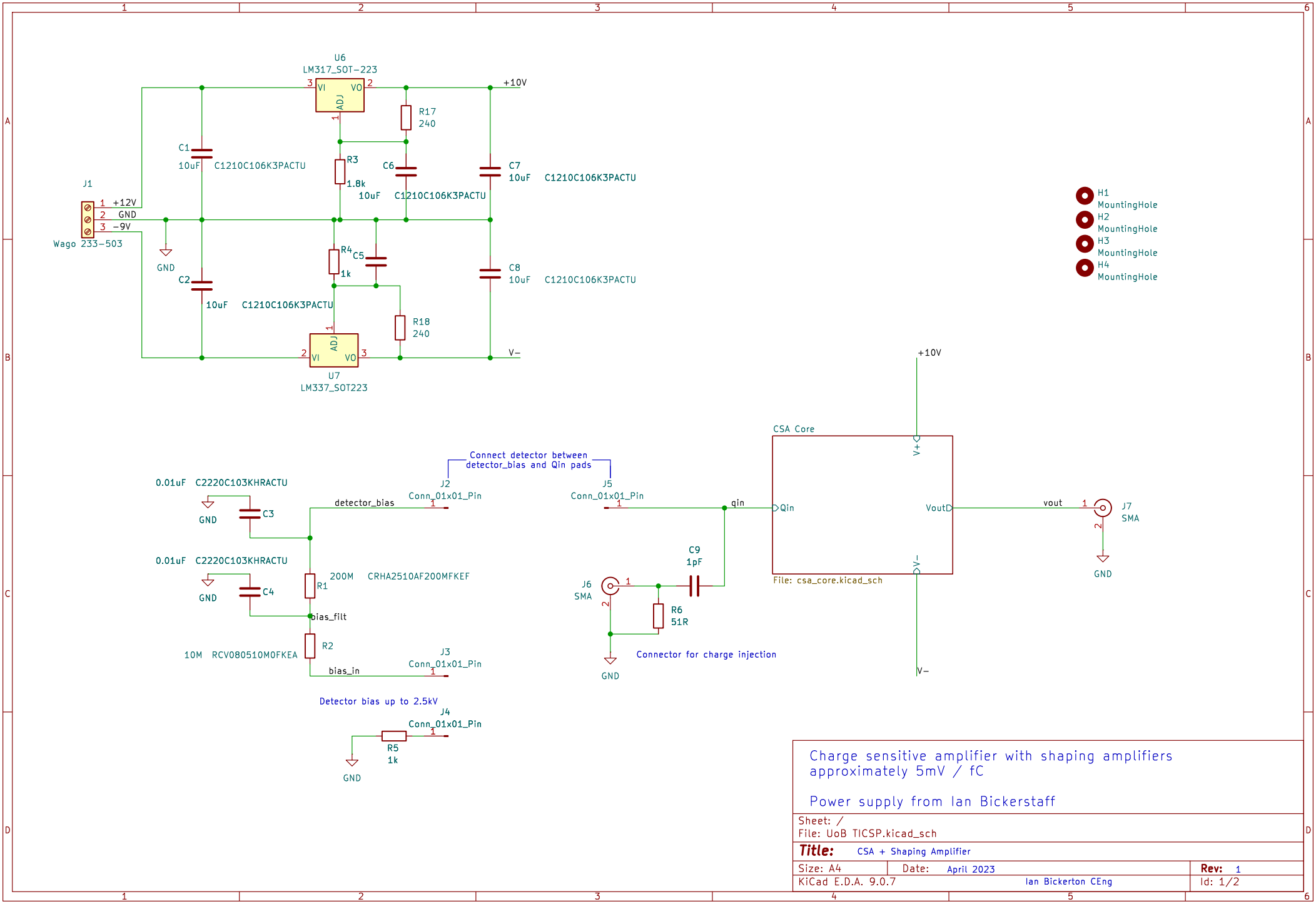

Charge sensitive amplifier with shaping amplifiers
approximately 5mV / fC

Power supply from Ian Bickerstaff

Sheet: /		
File: UoB TICSP.kicad_sch		
Title: CSA + Shaping Amplifier		
Size: A4	Date: April 2023	**Rev:** 1
KiCad E.D.A. 9.0.7	Ian Bickerton CEng	Id: 1/2

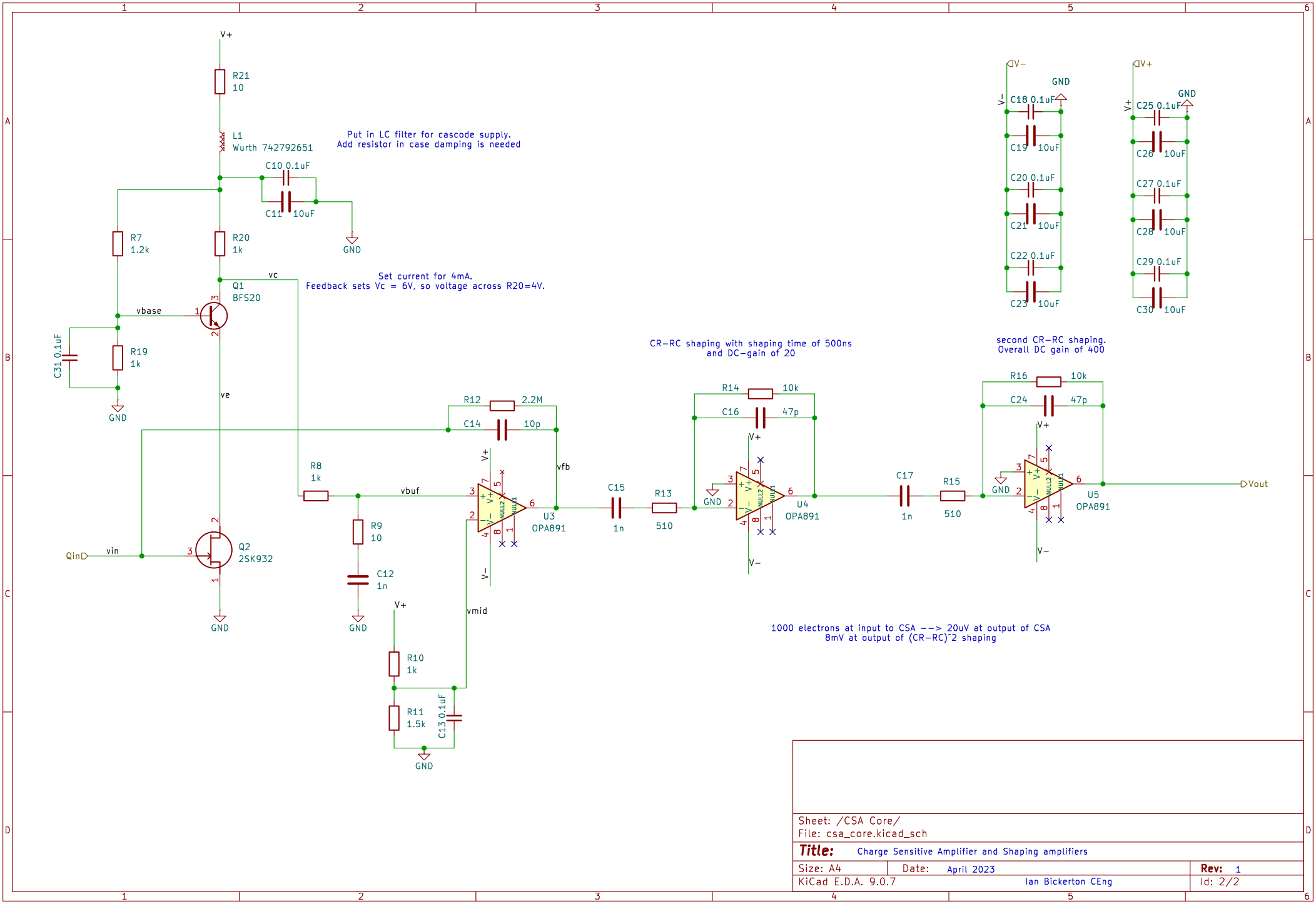

Sheet: /CSA Core/
File: csa_core.kicad_sch

Title: Charge Sensitive Amplifier and Shaping amplifiers

Size: A4	Date: April 2023	Rev: 1
KiCad E.D.A. 9.0.7	Ian Bickerton CEng	Id: 2/2